ECLIMA - 40155BG - TURBINA INTERIOR JUMPER-DUCATO-BOXER 06-14
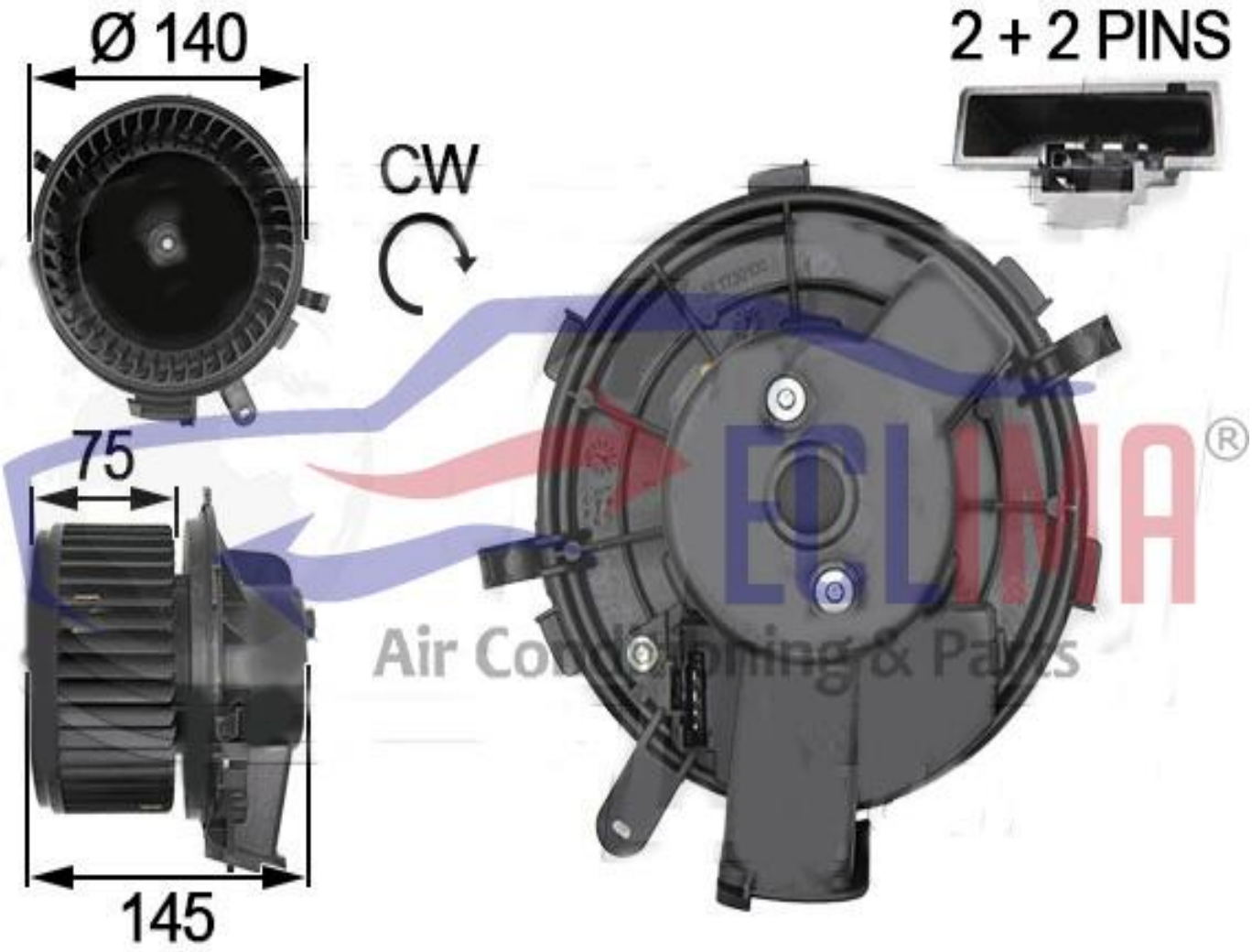
77364098 6441Y3