ECLIMA - B01200317 - CONDENSADOR VOLVO .S60-XC60-V70-XC70
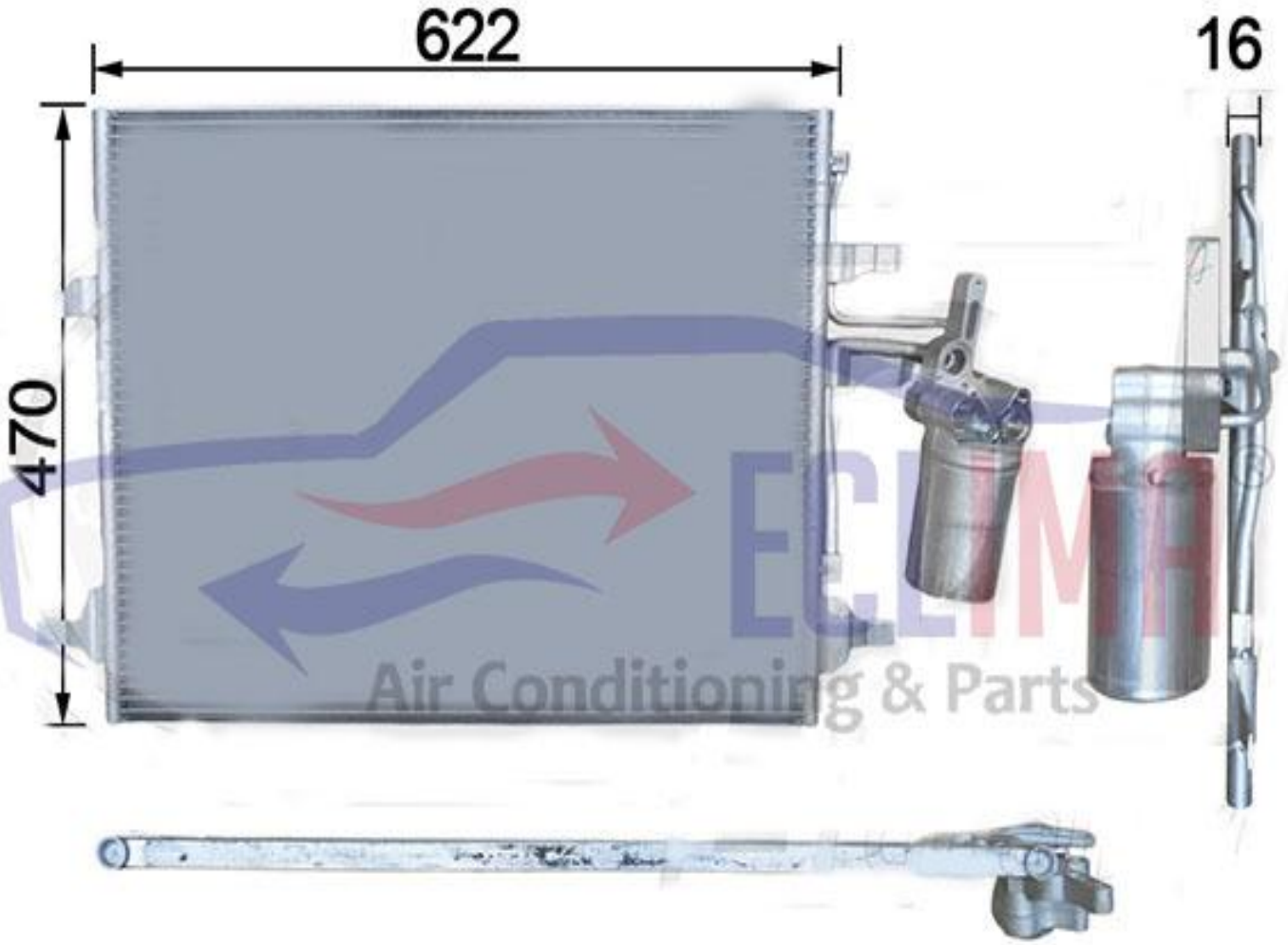
31305212 31332027 8G9119710AC 814321