ECLIMA - 40201BG - TURBINA INTERIOR FORD FIESTA VI
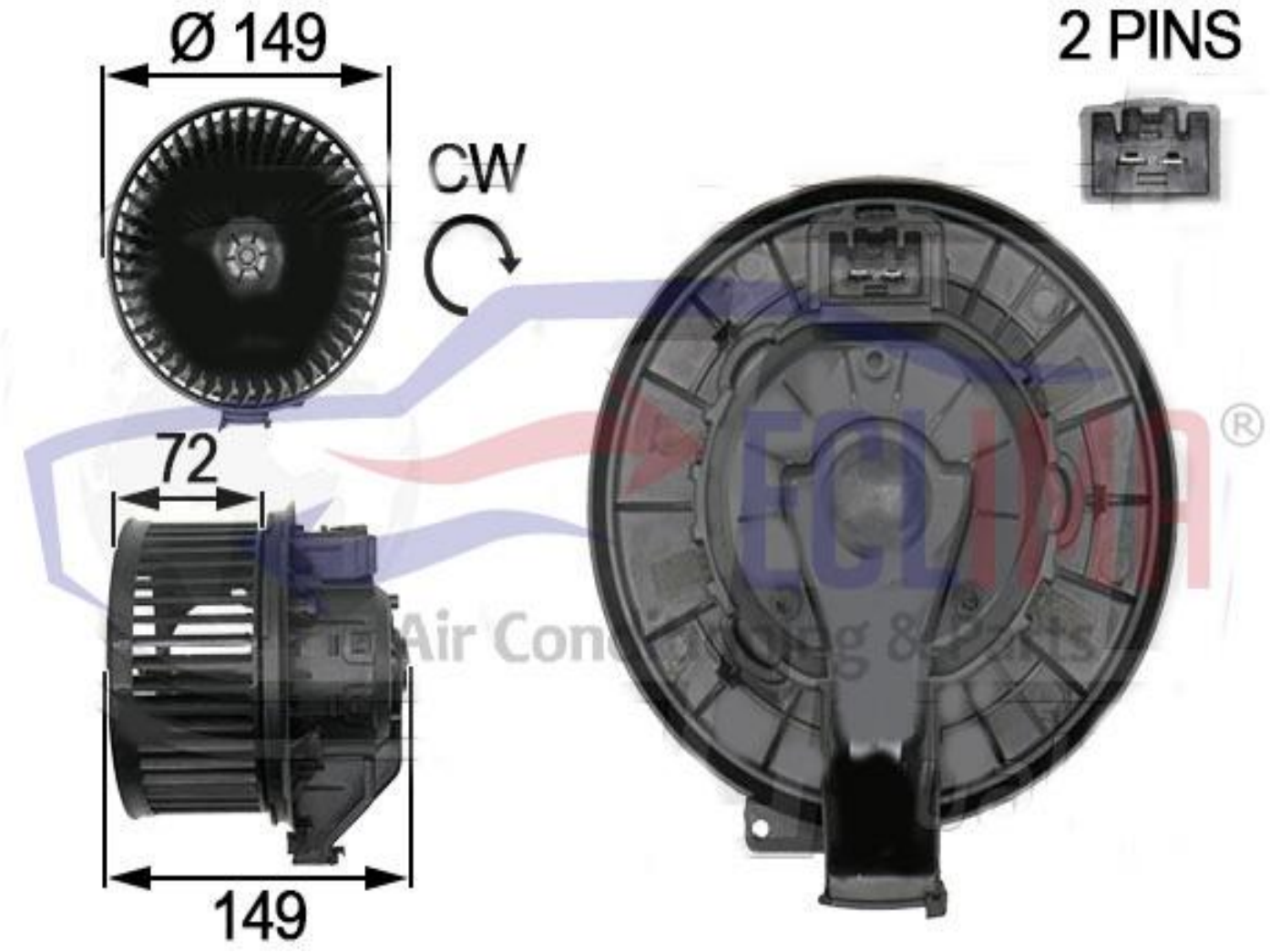
8E2H18456AB 8E2H18456AA VP8E2H18456AA